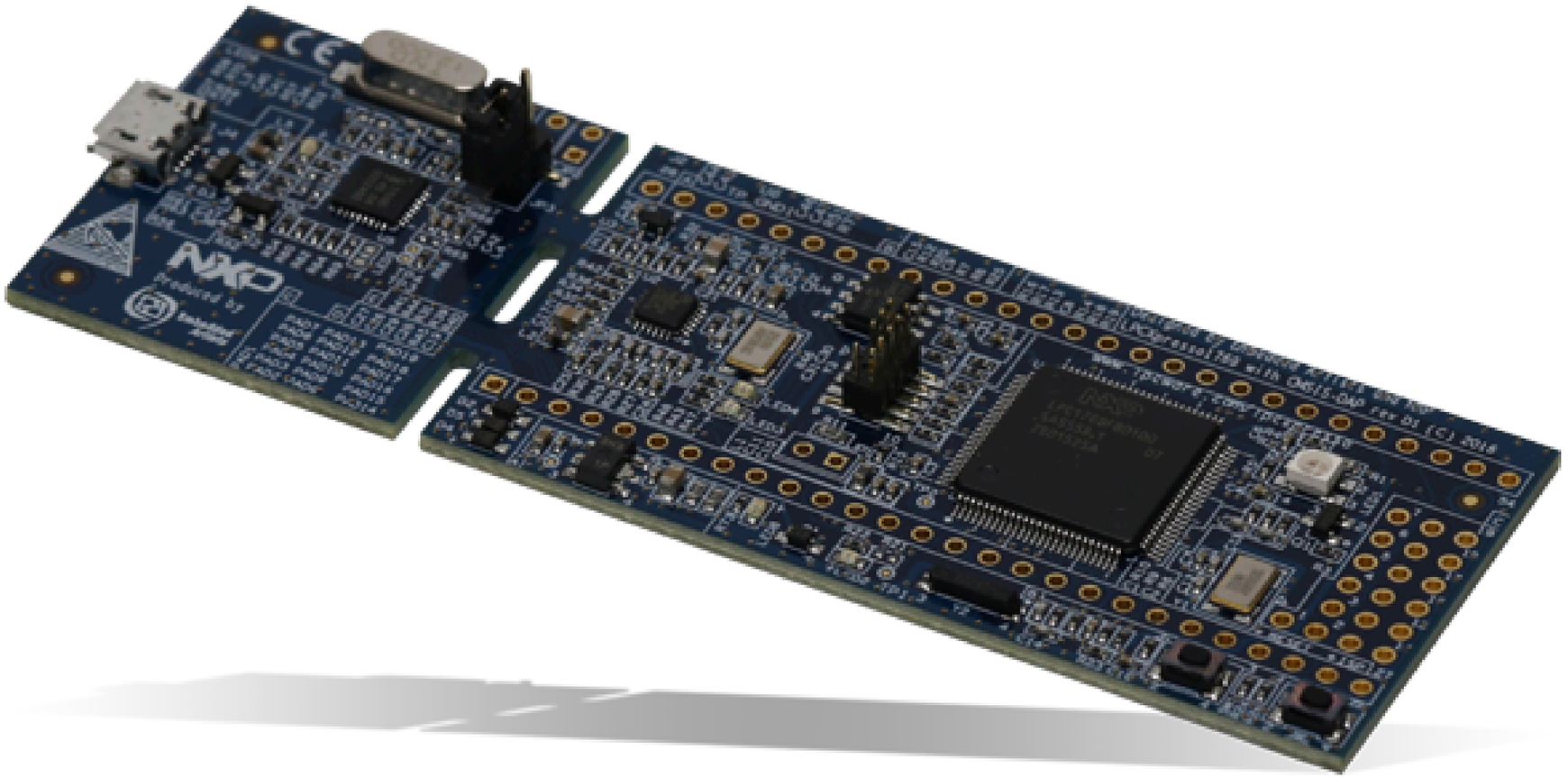

SYSTICK

David Trujillo

David Trujillo

System Tick Timer

David Trujillo

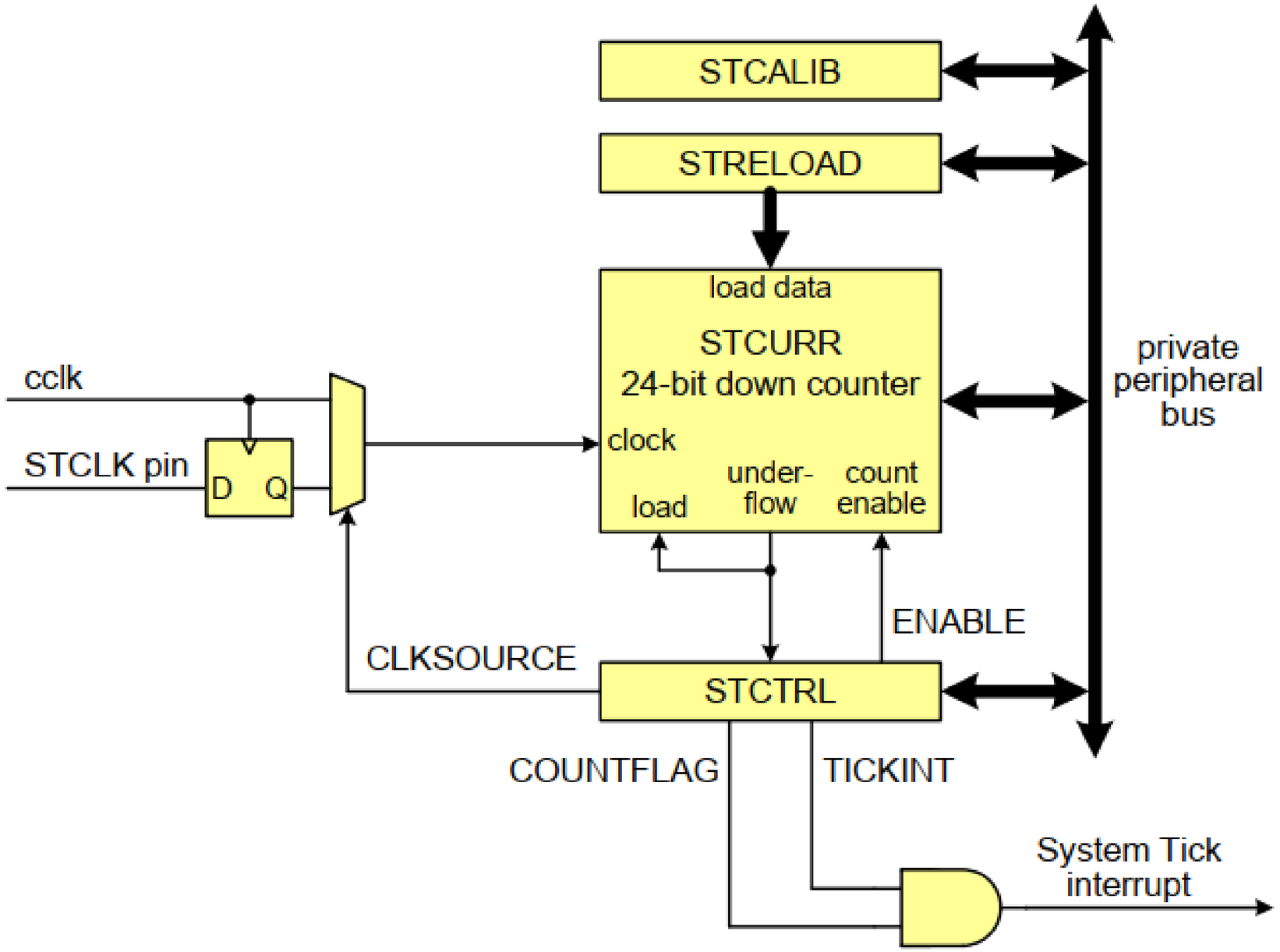

David Trujillo

Table 439. System Tick Timer register map

Name	Description	Access	Reset value[1]	Address
STCTRL	System Timer Control and status register	R/W	0x4	0xE000 E010
STRELOAD	System Timer Reload value register	R/W	0	0xE000 E014
STCURR	System Timer Current value register	R/W	0	0xE000 E018
STCALIB	System Timer Calibration value register	R/W	0x000F 423F	0xE000 E01C

David Trujillo

SYSTEM TIMER CONTROL

Table 440. System Timer Control and status register (STCTRL - 0xE000 E010) bit description

Bit	Symbol	Description	Reset value
0	ENABLE	System Tick counter enable. When 1, the counter is enabled. When 0, the counter is disabled.	0
1	TICKINT	System Tick interrupt enable. When 1, the System Tick interrupt is enabled. When 0, the System Tick interrupt is disabled. When enabled, the interrupt is generated when the System Tick counter counts down to 0.	0
2	CLKSOURCE	System Tick clock source selection. When 1, the CPU clock is selected. When 0, the external clock pin (STCLK) is selected.	1
15:3	-	Reserved, user software should not write ones to reserved bits. The value read from a reserved bit is not defined.	NA
16	COUNTFLAG	System Tick counter flag. This flag is set when the System Tick counter counts down to 0 and is cleared by reading this register.	0
31:17	-	Reserved, user software should not write ones to reserved bits. The value read from a reserved bit is not defined.	NA

David Trujillo

SYSTEM TIMER RELOAD

Table 441. System Timer Reload value register (STRELOAD - 0xE000 E014) bit description

Bit	Symbol	Description	Reset value
23:0	RELOAD	This is the value that is loaded into the System Tick counter when it counts down to 0.	0
31:24	-	Reserved, user software should not write ones to reserved bits. The value read from a reserved bit is not defined.	NA

David Trujillo

SYSTEM TIMER CURRENT

Table 442. System Timer Current value register (STCURR - 0xE000 E018) bit description

Bit	Symbol	Description	Reset value
23:0	CURRENT	Reading this register returns the current value of the System Tick counter. Writing any value clears the System Tick counter and the COUNTFLAG bit in STCTRL.	0
31:24	-	Reserved, user software should not write ones to reserved bits. The value read from a reserved bit is not defined.	NA

David Trujillo

SYSTEM TIMER CALIBRATION

Table 443. System Timer Calibration value register (STCALIB - 0xE000 E01C) bit description

Bit	Symbol	Value	Description	Reset value
23:0	TENMS		Reload value to get a 10 millisecond System Tick underflow rate when running at 100 MHz. This value initialized at reset with a factory supplied value selected for the LPC176x/5x. The provided values of TENMS, SKEW, and NOREF are applicable only when using a CPU clock or external STCLK source of 100 MHz.	0x0F 423F
29:24	-		Reserved, user software should not write ones to reserved bits. The value read from a reserved bit is not defined.	NA
30	SKEW		Indicates whether the TENMS value will generate a precise 10 millisecond time, or an approximation. This bit is initialized at reset with a factory supplied value selected for the LPC176x/5x. See the description of TENMS above. When 0, the value of TENMS is considered to be precise. When 1, the value of TENMS is not considered to be precise.	0
31	NOREF		Indicates whether an external reference clock is available. This bit is initialized at reset with a factory supplied value selected for the LPC176x/5x. See the description of TENMS above. When 0, a separate reference clock is available. When 1, a separate reference clock is not available.	0

David Trujillo

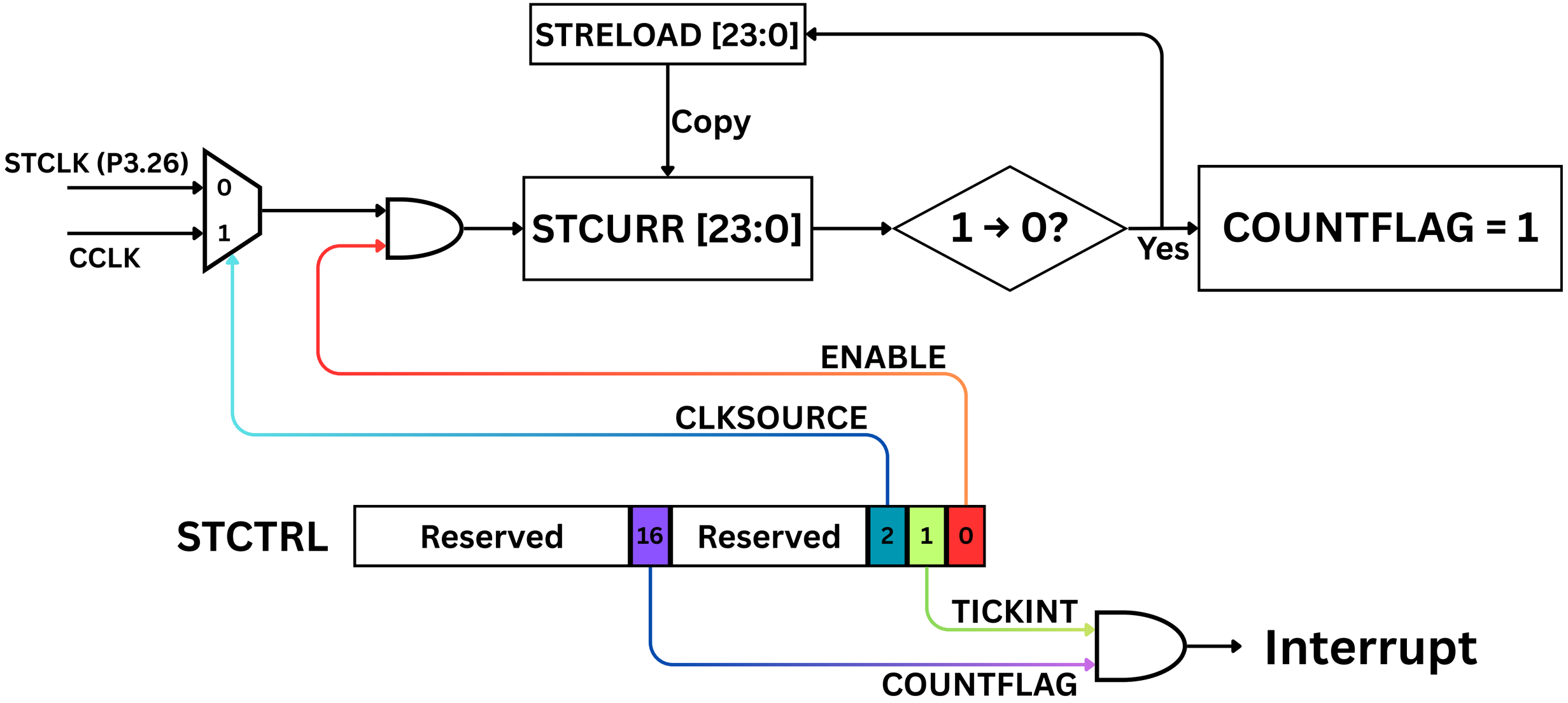

David Trujillo

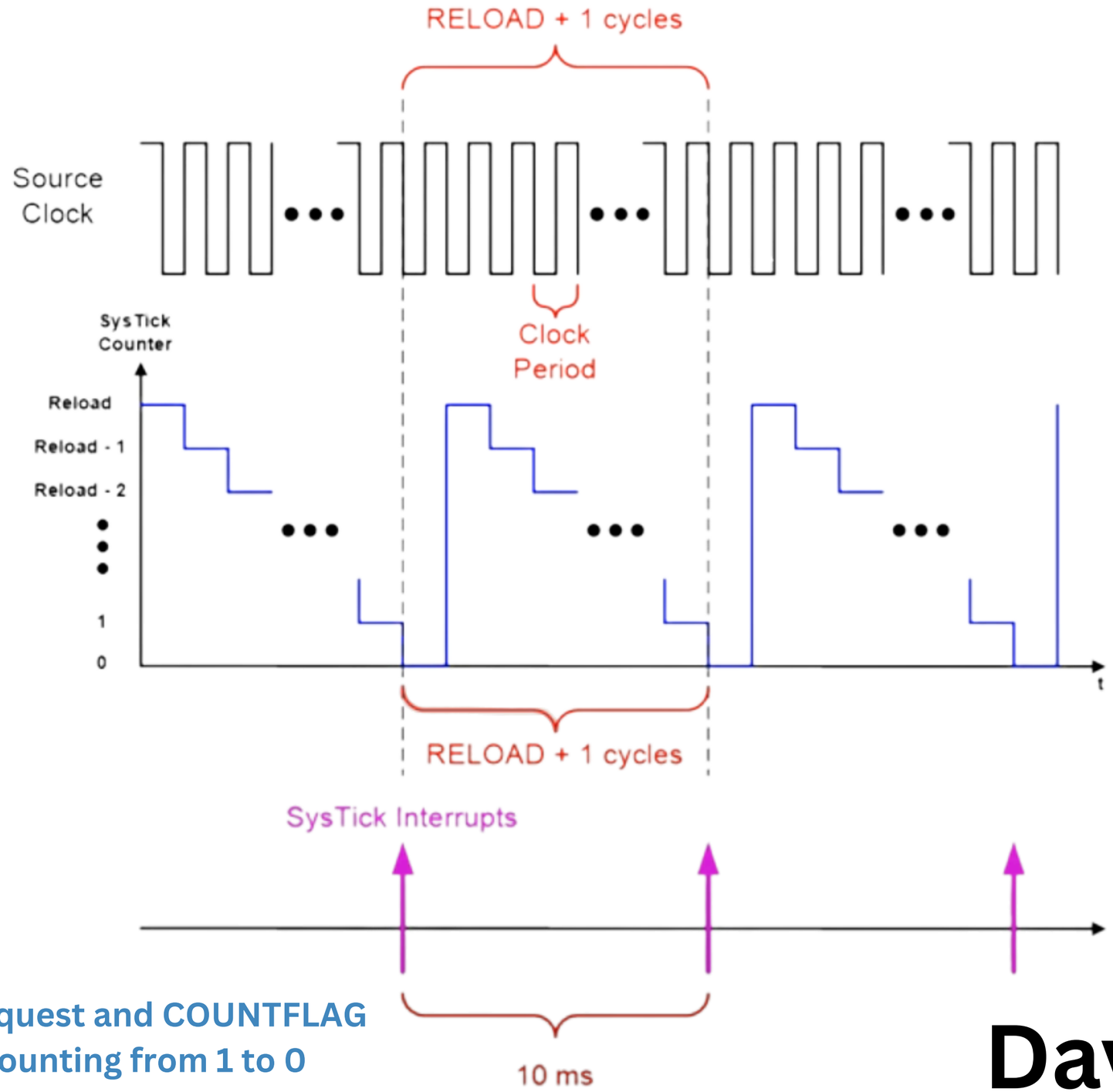

- **SysTick exception request and COUNTFLAG are activated when counting from 1 to 0**

David Trujillo

$$Reload_{max} = 2^{24} - 1 = 16.777.215$$

$$Reload = time[s] \cdot SystemCoreClock[Hz] - 1$$

$$Time_{max} = \frac{1}{SystemCoreClock} \cdot 2^{24} \cdot 1000[ms]$$

$$Time_{max} = 167,77216[ms]$$

David Trujillo

```
typedef struct {
  __IO uint32_t CTRL;
  __IO uint32_t LOAD;
  __IO uint32_t VAL;
  __I  uint32_t CALIB;
} SysTick_Type;
```

SysTick →

David Trujillo

DRIVERS

David Trujillo

```
inline static uint32_t SysTick_Config(uint32_t ticks)
```

System Tick Configuration

This function initialises the system tick timer and its interrupt and start the system tick timer. Counter is in free running mode to generate periodical interrupts.

Params: *[in]* **ticks** — Number of ticks between two interrupts

Returns: `0` Function succeeded
`1` Function failed

Remarks: Loads `"ticks-1"` into the `STRELOAD` register.

`core_cm3.h`

David Trujillo

```
void SYSTICK_InternalInit(uint32_t time)
```

Initializes the SysTick timer using the internal processor clock.

Calculates the required number of ticks based on the SystemCoreClock to achieve a specific millisecond interval. It configures the `LOAD` register, resets the current value, and selects the internal clock as the source.

Params: **time** — Desired interval in milliseconds.

Remarks: If the requested time exceeds the maximum possible interval for the SysTick timer, the `LOAD` register is set to its maximum value `ST_MAX_LOAD`, resulting in the longest possible timer interval.

`lpc17xx_systick.h`

```
void SYSTICK_ExternalInit(uint32_t extFreq, uint32_t time)
```

Initializes the SysTick timer using an external clock source.

Configures the `STCLK` pin via `PINSEL` and calculates the `LOAD` value based on the provided external frequency. This mode is used when a precise external reference is required or to save power by bypassing the internal PLL.

Params: **extFreq** — Frequency of the external clock source in Hz.
time — Desired interval in milliseconds.

`lpc17xx_systick.h`

David Trujillo

```
void SYSTICK_Cmd(FunctionalState newState)
```

Enables or disables the SysTick counter.

Controls the `ENABLE` bit in the SysTick Control and Status Register (`STCSR`). When enabled, the counter starts decrementing from the `LOAD` value.

Params: **newState** — `ENABLE` to start the counter, `DISABLE` to stop it.

`lpc17xx_systick.h`

```
void SYSTICK_IntCmd(FunctionalState newState)
```

Enables or disables the SysTick exception request.

Controls the `TICKINT` bit in the `STCSR` register. If enabled, the SysTick exception is generated when the counter reaches zero.

Params: **newState** — `ENABLE` to activate interrupts, `DISABLE` to deactivate them.

`lpc17xx_systick.h`

David Trujillo

```
inline static void SYSTICK_SetReloadValue(
    uint32_t reloadTicks)
```

Sets a new reload value for the counter.

Updates the `LOAD` register with a new 24-bit value. The new value takes effect the next time the counter reaches zero or if the `VAL` register is manually cleared.

Params: **reloadTicks** — The new 24-bit reload value (Max 0xFFFFFF).

`lpc17xx_systick.h`

```
inline static uint32_t SYSTICK_GetReloadValue()
```

Retrieves the current reload (`LOAD`) value.

Returns the 24-bit value currently programmed in the `LOAD` register, masked to ensure only valid bits are returned.

Returns: The 24-bit reload value.

`lpc17xx_systick.h`

David Trujillo

```
inline static FlagStatus SYSTICK_IsActive()
```

Checks if the SysTick counter is currently enabled.

Verifies the status of the `ENABLE` bit in the `CTRL` register.

Returns: `SET` if the counter is enabled, `RESET` otherwise.

`lpc17xx_systick.h`

```
inline static FlagStatus SYSTICK_HasFired()
```

Checks if the SysTick timer has counted to zero since the last read.

Reads the `COUNTFLAG` bit in the `CTRL` register. This bit is set to 1 when the counter transitions from 1 to 0.

Returns: `SET` if the timer has fired, `RESET` otherwise.

`lpc17xx_systick.h`

David Trujillo

```
inline static uint32_t SYSTICK_GetCurrentValue()
```

Retrieves the current value of the SysTick counter.

Reads the `VAL` register, which contains the current count of the 24-bit down-counter.

Returns: Current value of the 24-bit counter.

`lpc17xx_systick.h`

```
inline static void SYSTICK_ClearCounterFlag()
```

Clears the SysTick Count Flag.

Performs a dummy read of the `CTRL` register. According to the ARM Cortex-M3 architecture, reading the SysTick Control and Status Register clears the `COUNTFLAG` bit to 0.

`lpc17xx_systick.h`

David Trujillo